SPEC SHEET

PRO-FLO® PROGRESSIVE PUMP TECHNOLOGY

P820/P830 FIT METAL PUMP

51 mm (2") Pump
Maximum Flow Rate:
609 lpm (161 gpm)

P820 METAL

CLICK TO VIEW ADDITIONAL MODELS

PUMP DATA

Specifications:

Ship Weight.. 820 Threaded AL 47 kg (104 lb)
820 Threaded SS 73 kg (161 lb)
820 Threaded Iron 71 kg (156 lb)
830 Flanged AL 54 kg (118 lb)
830 Flanged SS 81 kg (178 lb)
830 Flanged Iron 82 kg (181 lb)
Air Inlet ..... 19 mm (3/4")
Liquid Inlet.....51 mm (2")
Liquid Outlet.....51 mm (2")

DIMENSIONAL DRAWINGS

P820 Metal

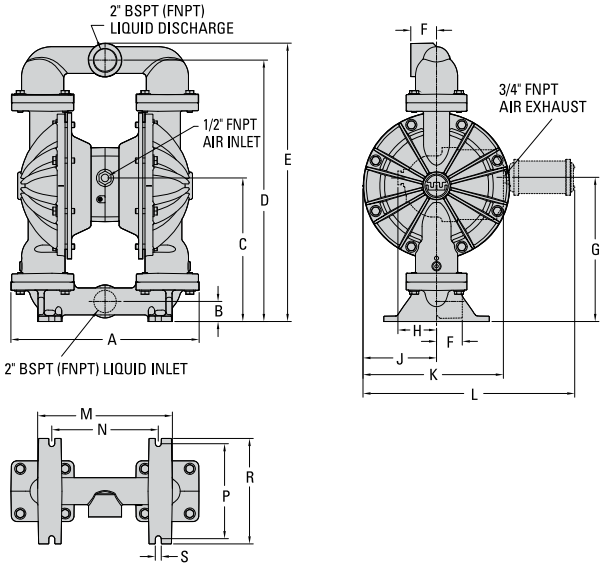

DIMENSIONS

ITEM	METRIC (mm)	STANDARD (inch)
A	453	17.9
B	48	1.9
C	346	13.6
D	630	24.8
E	670	26.4
F	62	2.4
G	347	13.7
H	93	3.7
J	177	7.0
K	338	13.3
L	510	20.1
M	324	12.8
N	257	10.1
P	229	9.0
R	254	10.0
S	14	0.6

LW0369 REV. A

Click button to view Dimensional Drawing ➔ P820 METAL | P830 METAL

P820 Stainless Steel

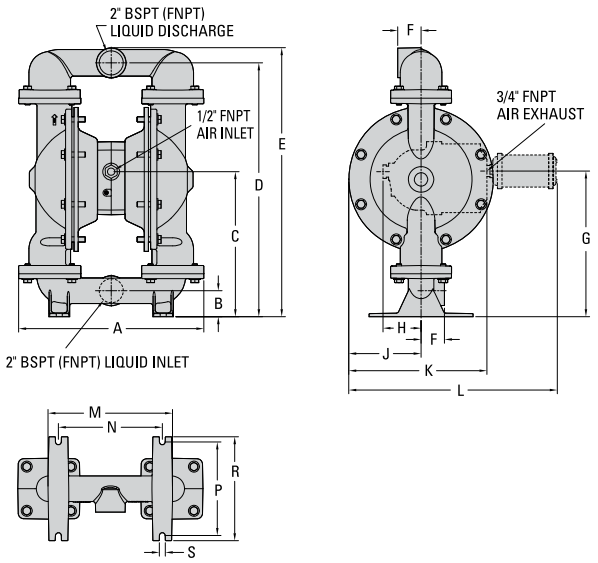

DIMENSIONS

ITEM	METRIC (mm)	STANDARD (inch)
A	452	17.8
B	64	2.5
C	354	14.0
D	620	24.4
E	658	25.9
F	58	2.3
G	356	14.0
H	93	3.7
J	178	7.0
K	338	13.3
L	510	20.1
M	305	12.0
N	254	10.0
P	229	9.0
R	254	10.0
S	15	0.6

LW0371 REV. A

Click button to view Dimensional Drawing ➔ P820 STAINLESS STEEL | P830 STAINLESS STEEL

WILDEN®

22069 Van Buren Street
Grand Terrace, CA 92313-5607 USA

O: +1 (909) 422-1730 F: +1 (909) 783-3440
www.psgdover.com

PSG® a DOVER company
psgdover.com

PERFORMANCE

P820/P830 METAL RUBBER-FITTED

Max. Flow Rate.....609 lpm (161 gpm)
Max. Inlet Pressure .....8.6 bar (125 psig)
Max. Solids Passage..... 6.4 mm (1/4")
Max. Suction Lift.....7.4 m Dry (24.3')
9.0 m Wet (29.5')

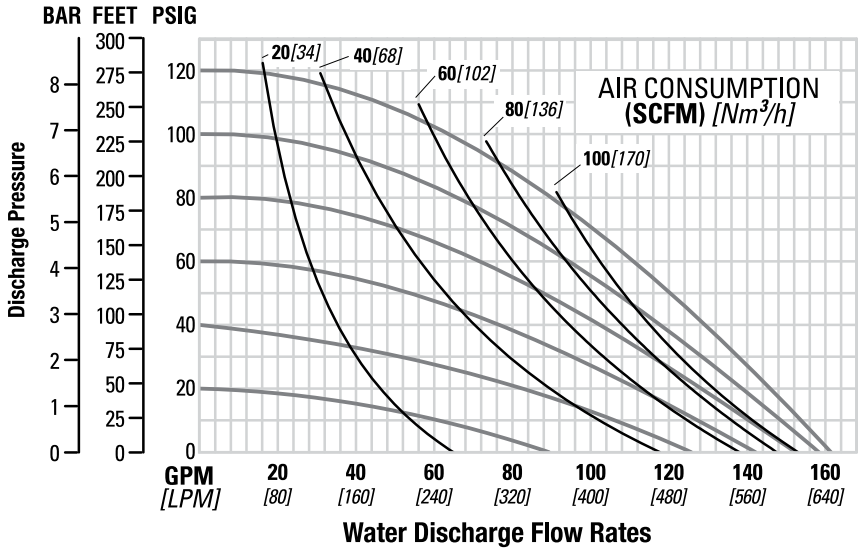

Click button to view Performance Curve ➔ RUBBER-FITTED | EZ-INSTALL TPE-FITTED

P820/P830 METAL REDUCED-STROKE PTFE-FITTED

Max. Flow Rate.....492 lpm (130 gpm)
Max. Inlet Pressure .....8.6 bar (125 psig)
Max. Solids Passage..... 6.4 mm (1/4")
Suction Lift.....4.6 m Dry (15.1')
9.0 m Wet (29.5')

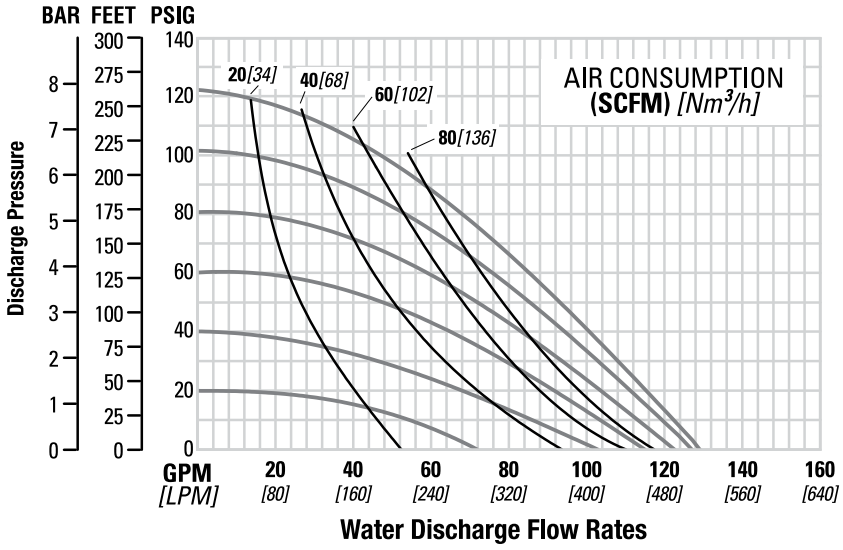

Click button to view Performance Curve ➔ REDUCED-STROKE PTFE-FITTED | FULL-STROKE PTFE-FITTED

WILDEN®
22069 Van Buren Street
Grand Terrace, CA 92313-5607 USA
O: +1 (909) 422-1730 F: +1 (909) 783-3440
www.psgdover.com
PSG® a DOVER company
psgdover.com